DRAWING REVISIONS			
REV	DOCUMENT	APP	DATE
A	08 - 1093	VS	9/18/08

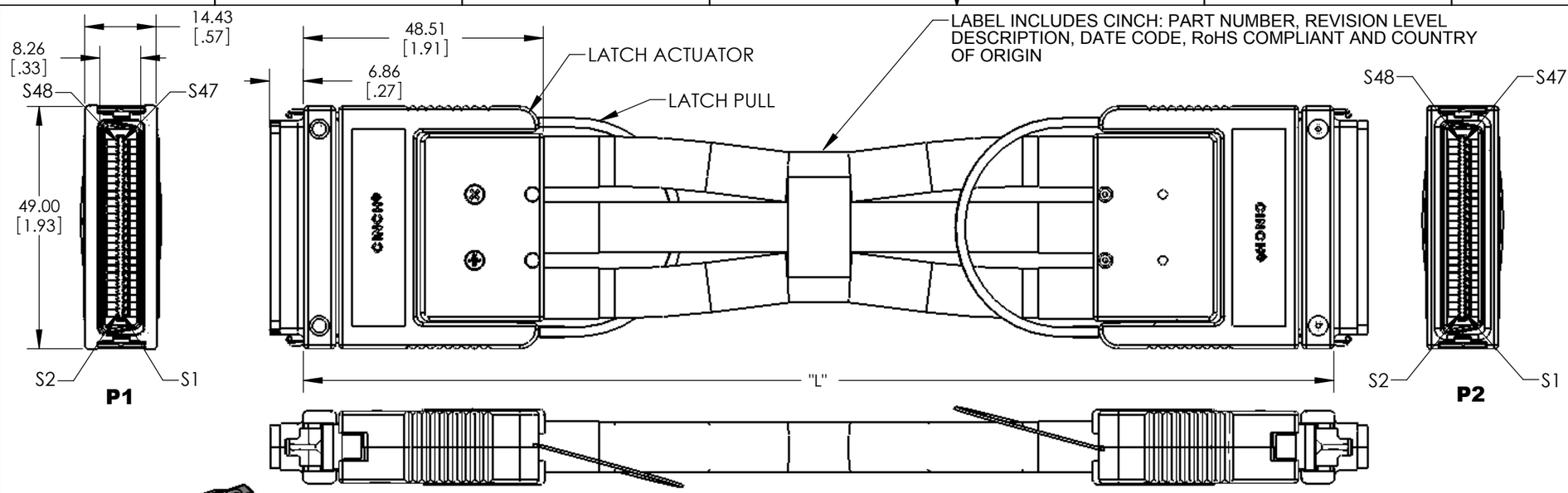

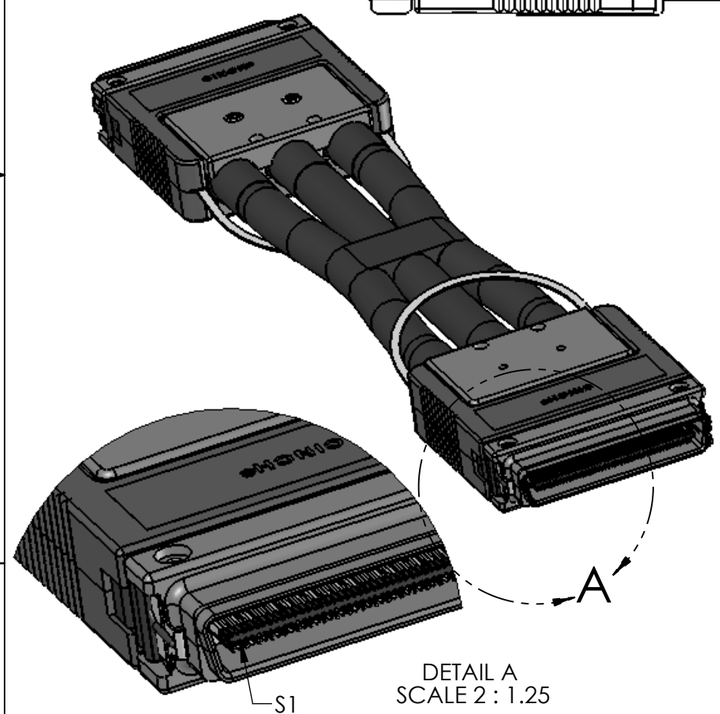

DETAIL A
SCALE 2 : 1.25

TOLERANCE TABLE	
"L" LENGHT	TOLERANCE
UP TO 1M	±40.0mm
1M TO 10M	±70.0mm OF "L"
GREATER THAN 10M	±100mm OF "L"

STANDARD PART NUMBERS CONSULT FACTORY FOR CUSTOM CONFIGURATIONS AND LENGTH	
30 AWG CABLE	
"L" Meters	Part Number
0.5	717 02 00 060
1	717 02 00 061
2	717 02 00 062
3	717 02 00 063
5	717 02 00 064
7	717 02 00 065
10	717 02 00 066

NOTES:

CABLE SPECIFICATIONS:
TWINAX; FULLY SHIELDED DIFFERENTIAL PAIRS, 30 AWG; UL STYLE CL2 OR CM.
CHARACTERISTIC IMPEDANCE: 100. +/- 5 OHMS.

PLUG MATERIALS:
CONTACTS - COPPER ALLOY; GOLD PLATED OVER NICKEL.
SHELL - ZINC DIE CAST; NICKEL PLATED OVER COPPER.
LATCH MECHANISM - THERMOPLASTIC AND NICKEL ALLOY.
CONNECTOR HOUSING - HIGH TEMPERATURE THERMOPLASTIC UL94V-0.

MECHANICAL PERFORMANCE:
LATCH RETENTION FORCE: - 75 N (16.9 LBS) MIN.
DURABILITY - 250 CYCLES.

ENVIRONMENT:
OPERATING TEMPERATURE RANGE: -20°C to 75°C.

PERFORMANCE:
DIRECT ATTACH CABLE ASSEMBLY MEETS InfiniBand™ REQUIREMENTS FOR HIGH SPEED DATA TRANSFERS AND SFF 8470.

DIMENSIONS IN [ ] ARE IN INCHES.

RoHS COMPLIANT

MODELED BY:

UNITS: METRIC
DO NOT SCALE DRAWING
UNLESS OTHERWISE SPECIFIED: ALL DIMENSIONS ARE IN MM:
FILLET/RADII 0.50 MAX
TOLERANCES: .X ± .3; .XX ± .13; .XXX ± .025; ANGULAR ± 0. 5°

SOLIDWORKS

Cinch
1700 FINLEY RD
LOMARD, IL. 60148

DRAWN BY: V.SKUZA
DATE: 6/19/08
TITLE: STANDARD 12X STRAIGHT 30 AWG DIRECT ATTACH PASSIVE CABLE WITH LATCH
DESIGN ENGINEER
MATERIAL
CONTROL SPEC NUMBER
DESIGN ENGINEERING MFR.
MATERIAL SPEC NUMBER
FINISH
PROJECT NUMBER
MFG. ENGINEERING
CAD FILE NUMBER
DRAWING NUMBER: 717 02 00 060 S
QUALITY ASSURANCE
CAGE IDENT NO.
SIZE: B
SCALE: 1 : 1
SHEET 1 OF 1

THIS DOCUMENT IS THE PROPERTY OF CINCH. NEITHER THIS DOCUMENT NOR ANY OF THE INFORMATION CONTAINED IN IT MAY BE DUPLICATED OR DISCLOSED WITHOUT PRIOR WRITTEN CONSENT OF CINCH.