| DATE | REV | ECN | APP'D. BY |
|---|---|---|---|
| 11/5/20 | A0 | Released | AB |
| | | | |

## ISOMETRIC VIEW

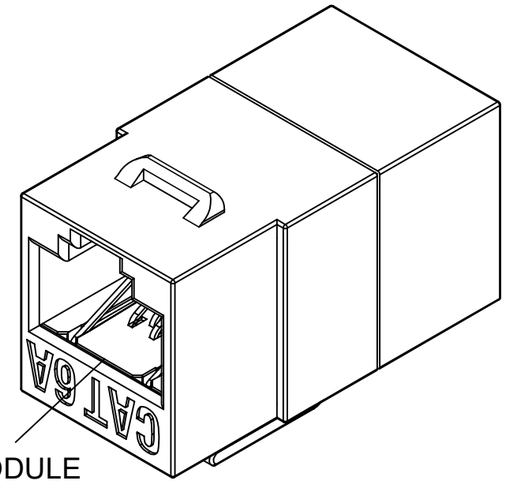


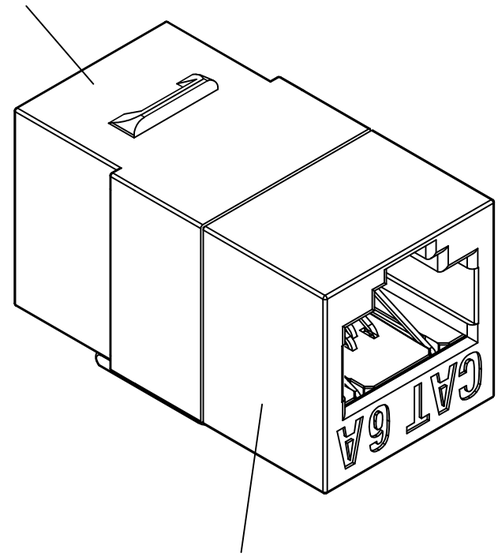


## ASSEMBLY DIMENSION

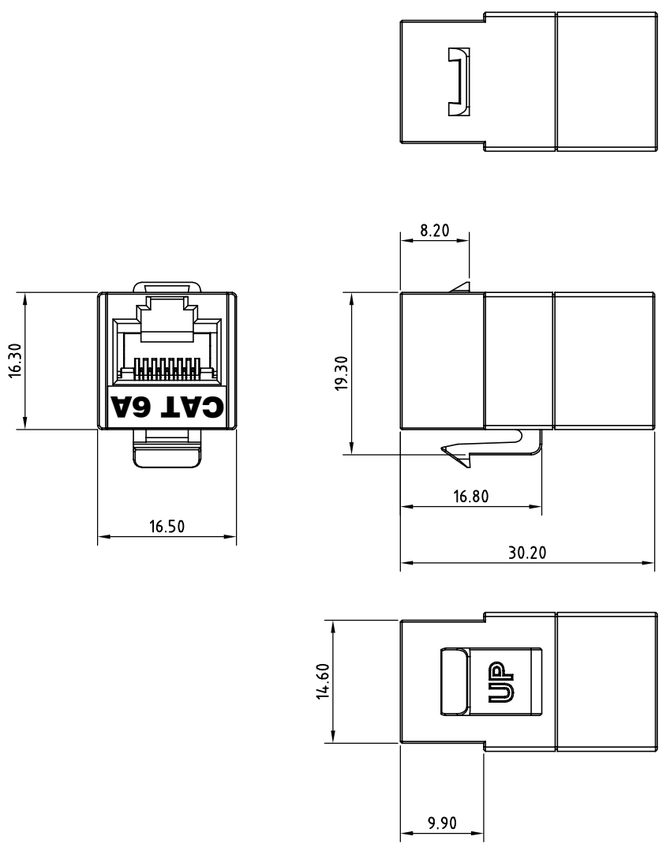


| COMPONENTS | | |
|---|---|---|
| 3 | INSERT MODULE | 2 |
| 2 | JACK HOUSING LEFT | 1 |
| 1 | JACK HOUSING RIGHT | 1 |
| ITEM | PART NAME | Q'TY |

TRANSMISSION PERFORMANCE
Meet all requirement specified in channel requirement of:
ISO/IEC 11801 , Class $E_A$
ANSI/TIA-568-C.2, Category 6A

ELECTRICAL
Electrical Insulation Resistance : 500 MΩ min. @ 100V d.c
Dielectric Withstanding Voltage : 1000V d.c. or a.c. Peak Contact to Contact @ 60Hz for 1 minute

MECHANICAL
Insertion / Extraction Life : 750 Cycles Minimum

PHYSICAL
Housing : High-Impact, Flame-Retardant Plastic, UL 94V-0
Spring Wire : Phosphor Bronze Alloy Plated With 50 micro-inch of Gold

| SS-82020-001 |
|---|
| PART NUMBER |

RoHS 2002/95/EC

THIRD ANGLE PROJECTION


206 Van Vorst Street
Jersey City, NJ 07302
+1 201 432 0463
http://www.belfuse.com


DO NOT SCALE DRAWING
DRAWING IS SUBJECT TO CHANGE WITHOUT NOTICE
DIMENSIONS: METRIC
UNLESS OTHERWISE SPECIFIED TOLERANCES ARE ±0.2 ANGLES ARE ± 1°
SHEET NO. 1 OF 1

TITLE: CAT 6A UNSHIELDED KEYSTONE COUPLER JACK


THIS DRAWING AND THE SUBJECT MATTER SHOWN THEREON ARE CONFIDENTIAL AND THE PROPRIETARY PROPERTY OF BEL FUSE, INC. AND SHALL NOT BE REPRODUCED, COPIED, OR USED IN ANY MANNER WITHOUT PRIOR WRITTEN CONSENT OF BEL FUSE, INC.


| | | | |
|---|---|---|---|
| DRN BY: | JE | DATE | 10/28/20 |
| APPD BY: | AB | DATE | 11/5/20 |
| DWG NO. | CT820037 | REV. | A0 |


Please read our datasheet & drawing disclaimer here.