DATE	REV.	ECN	APP'D BY
8-9-23	A0	12227	GWL
3-22-24	A1	12342	JE

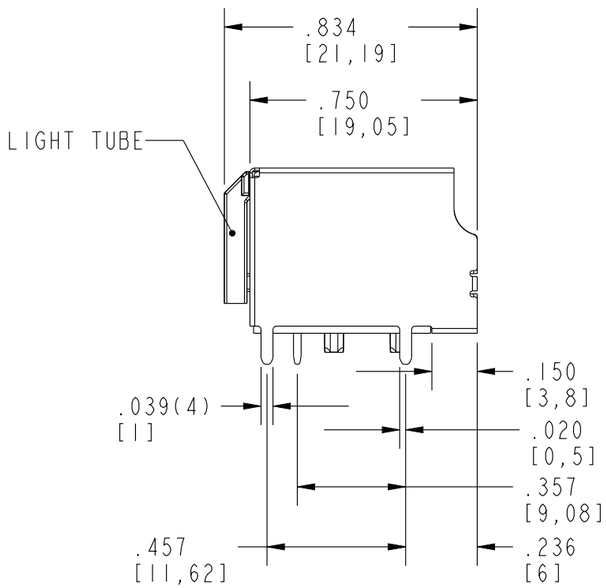

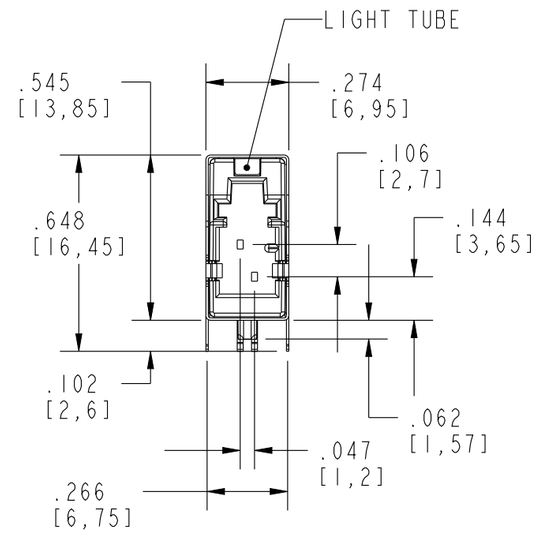

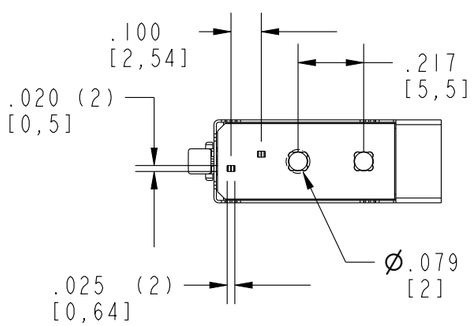

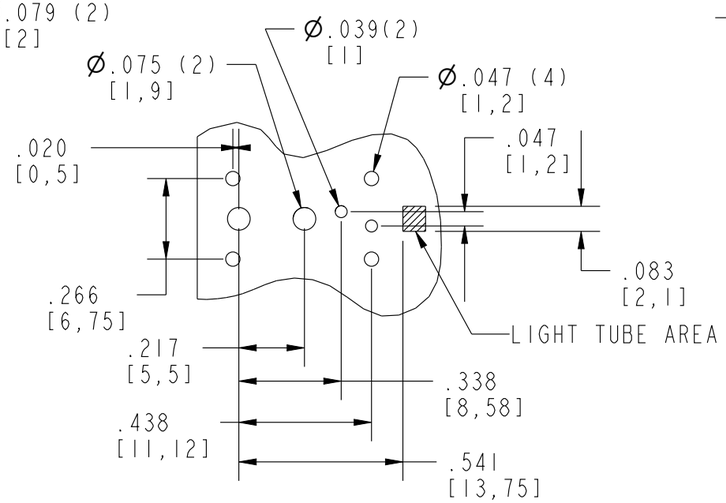

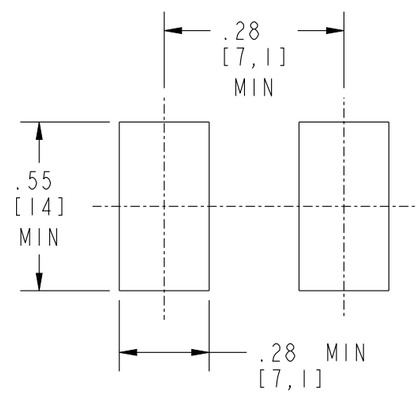

RECOMMENDED PANEL CUT-OUT

NOTES:

1. MEETS THE MECHANICAL, ELECTRICAL, AND TRANSMISSION REQUIREMENTS OF IEC 63171 AND IEC 63171-1.
2. SUPPORTS PoDL CLASSES 1-15 (IEEE 802.3CG).
3. SUPPORTS PoE 1000BASE-T1, 100BASE-T1, 10BASE-T1L, AND 10BASE-T1S.
4. MEETS CLASS T1-B PER ISO/IEC 11801-1 Am.1.
5. MEETS ANSI/TIA-568.5.
6. MATERIAL HOUSING: UL94-V0 PBT, GRAY
   CONTACTS: COPPER ALLOY, 30µIN GOLD PLATED
   SHIELD: COPPER ALLOY, TIN PLATED
7. OPERATING TEMPERATURE -20°C TO 60°C.
8. INSTALLATION: 0°C TO 50°C.
9. SUPPLIED ON TAPE AND REEL, 200 PCS PER REEL.

SS-69000-001
PART NUMBER

THIRD ANGLE PROJECTION

DO NOT SCALE DRAWING

DRAWING IS SUBJECT TO CHANGE WITHOUT NOTICE

DIMENSIONS: INCHES [METRIC]

UNLESS OTHERWISE SPECIFIED TOLERANCES ARE ±.005 [0.13] ANGLES ARE ±1°

SHEET NO. 1 OF 1

RoHS

stewart CONNECTOR a bel group

11118 Susquehanna Trail South
Glen Rock, PA 17327-9199
(717) 235-7512
http://www.stewartconnector.com

TITLE: SINGLE PAIR ETHERNET JACK, LC SIMPLEX, WITH LIGHT TUBE

THIS DRAWING AND THE SUBJECT MATTER SHOWN THEREON ARE CONFIDENTIAL AND THE PROPRIETARY PROPERTY OF STEWART CONNECTOR AND SHALL NOT BE REPRODUCED, COPIED, OR USED IN ANY MANNER WITHOUT PRIOR WRITTEN CONSENT OF STEWART CONNECTOR. ONE OR MORE U.S. PATENTS MAY APPLY TO THIS PRODUCT. FOR DETAILS, PLEASE VISIT: HTTP://BELFUSE.COM/STEWART/STEWART_PATENTS/

DRN BY: JE		DATE 6-8-23	
APPD BY: GWL		DATE 8-9-23	
DWG. NO. CT690001			REV. A1