DATE	REV	ECN	APP'D. BY
10-6-15	B5	10435	TRM
2-18-16	B6	10556	TRM

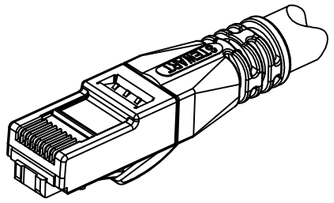

ISOMETRIC VIEW OF TERMINATED PLUG

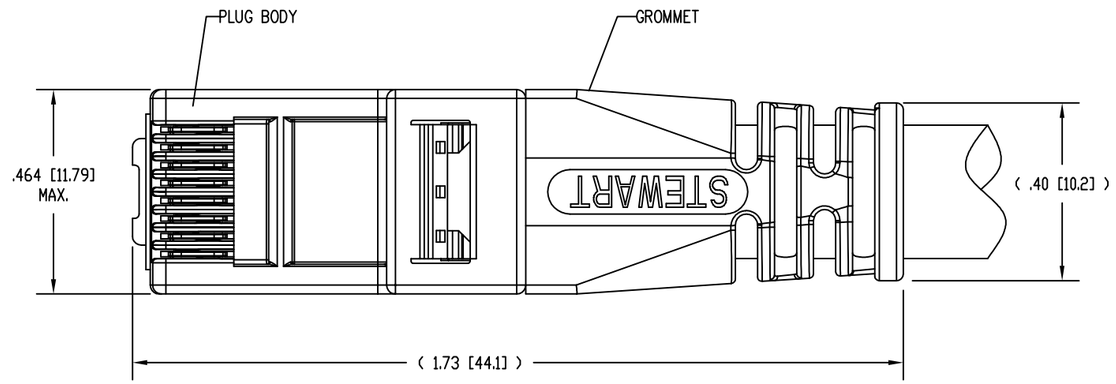

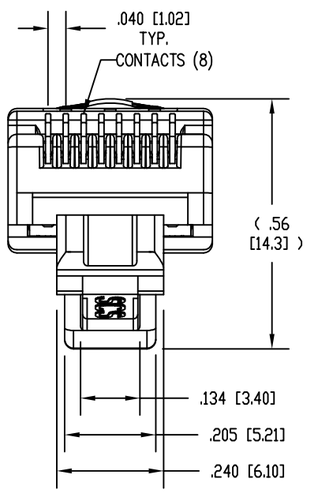

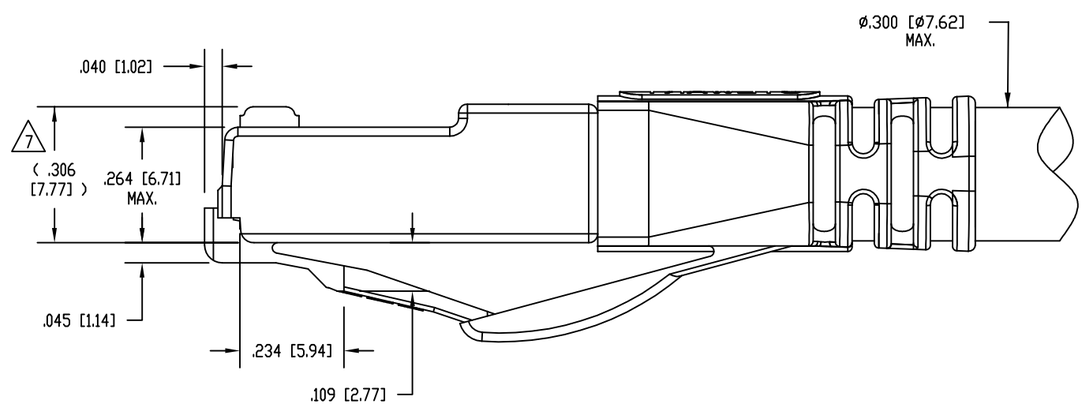

NOTES:

1. PLUG KIT CONSISTS OF:
   PRE-INSERTED PLUG BODY WITH SHIELD - 39100-308
   LOAD BAR - 39100-866
   WIRE ALIGNER - 39100-864
   GROMMET - 39100-865

2. MATERIALS:
   PLUG BODY: CLEAR POLYCARBONATE, UL 94-V0
   LOAD BAR: BLACK POLYCARBONATE, UL 94-V0
   WIRE ALIGNER: CLEAR POLYCARBONATE, UL 94-V0
   GROMMET: BLACK POLYCARBONATE, UL 94-V0
   CONTACTS: COPPER ALLOY, SELECTIVE GOLD PLATING
   SHIELD: COPPER ALLOY, NICKEL PLATE

3. FOR PRODUCT SPECIFICATION SEE PR026-01.

4. CONTACTS TERMINATE SOLID OR STRANDED CONDUCTORS BETWEEN .033 [0.84] TO .038 [0.97] OUTSIDE DIAMETER OF INSULATION.

5. PRODUCT DESIGNED FOR CATEGORY 6A APPLICATIONS.

6. DIMENSIONS AND TOLERANCES COMPLY WITH TIA-1096 STANDARD FORMERLY FCC/CFR 47, PART 68.

7. TERMINATED PLUG HEIGHT: .237 [6.02] ±.005 [0.13].

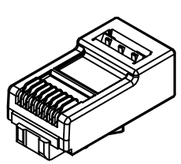

PRE-INSERTED
PLUG BODY
39100-308

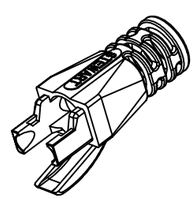

GROMMET
39100-865

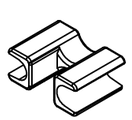

WIRE ALIGNER
39100-864

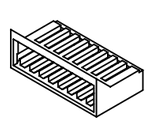

LOAD BAR
39100-866

RoHS

50 MICRO-INCHES [1.27um]	SS-39100-028
CONTACT PLATING IN MATING AREA	PART NUMBER

THIRD ANGLE PROJECTION

stewart CONNECTOR a bel group

11118 Susquehanna Trail South
Glen Rock, PA 17327-9199
(717) 235-7512
http://www.stewartconnector.com

DO NOT SCALE DRAWING

DRAWING IS SUBJECT TO CHANGE WITHOUT NOTICE

DIMENSIONS: INCHES [METRIC]

UNLESS OTHERWISE SPECIFIED TOLERANCES ARE ±.005 [0.13] ANGLES ARE ± 1°

SHEET NO. 1 OF 1

TITLE: 8 CONDUCTOR, 8 POSITION UNSHIELDED CAT 6A PLUG, WITH LOAD BAR, WIRE ALIGNER AND GROMMET, .300 MAX CABLE

THIS DRAWING AND THE SUBJECT MATTER SHOWN THEREON ARE CONFIDENTIAL AND THE PROPRIETARY PROPERTY OF STEWART CONNECTOR AND SHALL NOT BE REPRODUCED, COPIED, OR USED IN ANY MANNER WITHOUT PRIOR WRITTEN CONSENT OF STEWART CONNECTOR. ONE OR MORE U.S. PATENTS MAY APPLY TO THIS PRODUCT. FOR DETAILS, PLEASE VISIT: HTTP://BELFUSE.COM/STEWART/STEWART_PATENTS/

DRN BY:	DHG	DATE	4-26-11
APPD BY:	TRM	DATE	11-08-11
DWG NO.	CT390079	REV.	B6

AutoCAD