DATE	REV	ECN	APP'D. BY
10-6-15	A4	10435	TRM
2-19-16	A5	10557	TRM
10-20-17	A6	11130	DHG

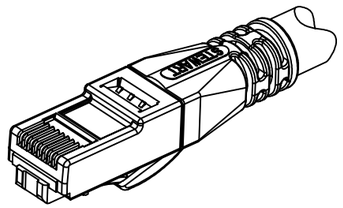

ISOMETRIC VIEW OF TERMINATED PLUG

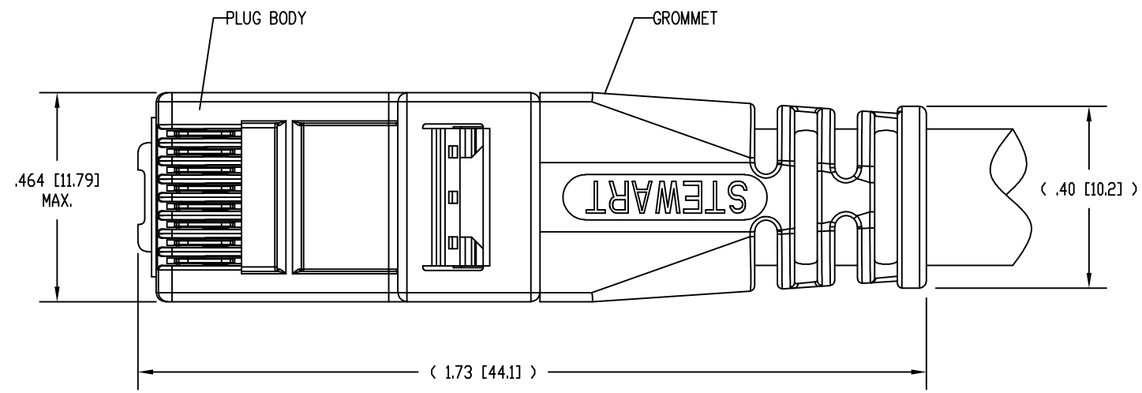

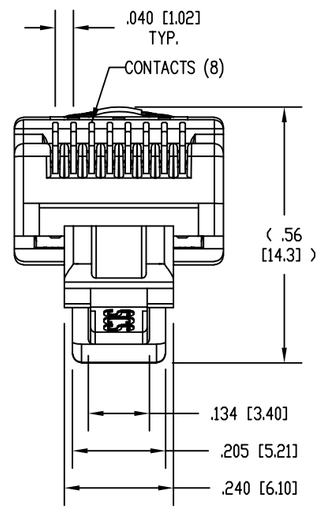

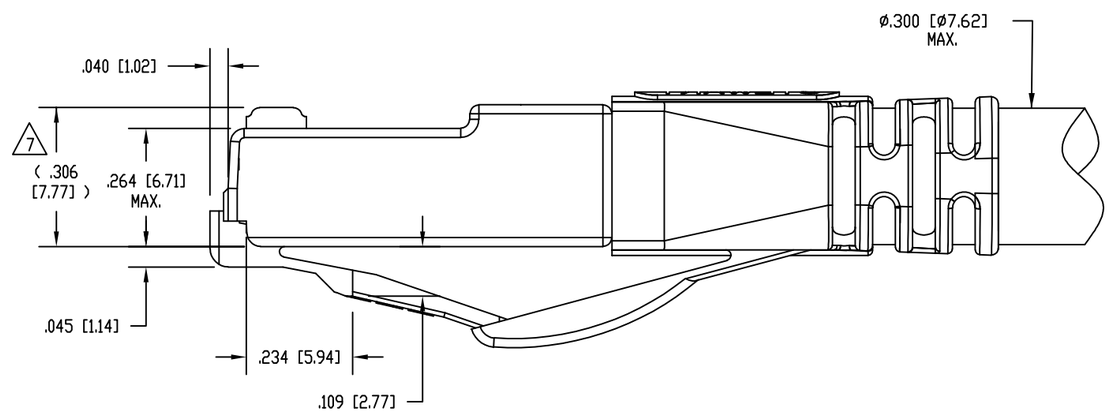

NOTES:

1. PLUG KIT CONSISTS OF:
   PRE-INSERTED PLUG BODY
   LOAD BAR
   WIRE ALIGNER
   GROMMET

2. MATERIALS:
   PLUG BODY: CLEAR POLYCARBONATE, UL 94-V0
   LOAD BAR: BLACK POLYCARBONATE, UL 94-V0
   WIRE ALIGNER: CLEAR POLYCARBONATE, UL 94-V0
   GROMMET: CLEAR POLYCARBONATE, UL 94-V0
   CONTACTS: COPPER ALLOY, SELECTIVE GOLD PLATING

3. FOR PRODUCT SPECIFICATION SEE PR026-01.

4. CONTACTS TERMINATE SOLID OR STRANDED CONDUCTORS BETWEEN .037 [0.94] TO .042 [1.07] OUTSIDE DIAMETER OF INSULATION.

5. PRODUCT DESIGNED FOR CATEGORY 6A APPLICATIONS.

6. DIMENSIONS AND TOLERANCES COMPLY WITH TIA-1096 STANDARD FORMERLY FCC/CFR 47, PART 68.

7. TERMINATED PLUG HEIGHT: .237 [6.02] ±.005 [0.13].

8. INDIVIDUALLY BAGGED PLUG KITS (1 EACH PLUG BODY, LOAD BAR, WIRE ALIGNER, AND BOOT) PACKAGED 25 PER BOX WITH INSTRUCTION SHEET.

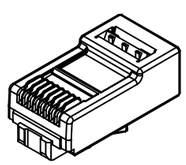

PRE-INSERTED
PLUG BODY
39100-308

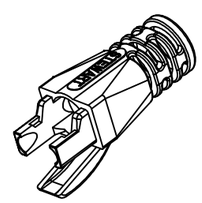

GROMMET
39100-865

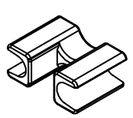

WIRE ALIGNER
39100-864

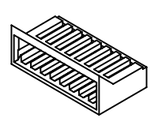

LOAD BAR
39100-847

BULK	50 MICRO-INCHES [1.27um]	SS-39100-031
BAGGED 8	50 MICRO-INCHES [1.27um]	SS-39100-058
PACKAGING	CONTACT PLATING IN MATING AREA	PART NUMBER

RoHS

THIRD ANGLE PROJECTION

DO NOT SCALE DRAWING

DRAWING IS SUBJECT TO CHANGE WITHOUT NOTICE

DIMENSIONS: INCHES [METRIC]

UNLESS OTHERWISE SPECIFIED TOLERANCES ARE ±.005 [0.13] ANGLES ARE ± 1°

SHEET NO. 1 OF 1

stewart CONNECTOR
a bel group
11118 Susquehanna Trail South
Glen Rock, PA 17327-9199
(717) 235-7512
http://www.stewartconnector.com

TITLE: 8 CONDUCTOR, 8 POSITION UNSHIELDED CAT 6A PLUG, WITH LOAD BAR, WIRE ALIGNER AND GROMMET, .300 MAX CABLE

THIS DRAWING AND THE SUBJECT MATTER SHOWN THEREON ARE CONFIDENTIAL AND THE PROPRIETARY PROPERTY OF STEWART CONNECTOR AND SHALL NOT BE REPRODUCED, COPIED, OR USED IN ANY MANNER WITHOUT PRIOR WRITTEN CONSENT OF STEWART CONNECTOR. ONE OR MORE U.S. PATENTS MAY APPLY TO THIS PRODUCT. FOR DETAILS, PLEASE VISIT: HTTP://BELFUSE.COM/STEWART/STEWART_PATENTS/

DRN BY:	DHG	DATE	12-20-11
APPD BY:	SAW	DATE	12-20-11
DWG NO.	CT390084	REV.	A6

AutoCAD