DATE	REV	ECN	APP'D. BY
5-9-17	A1	10999	TRM
5-12-17	A2	11003	TRM

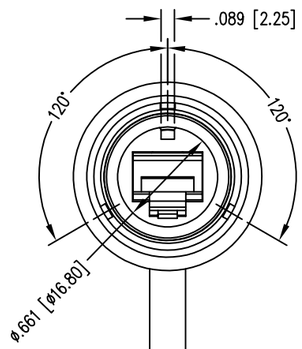

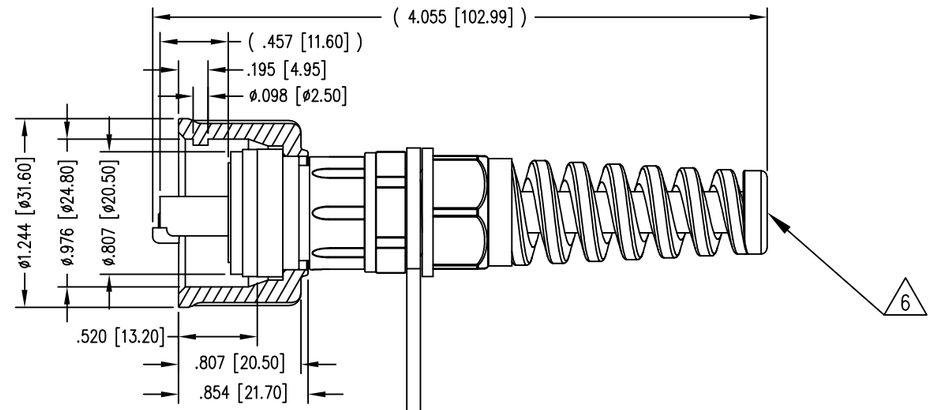

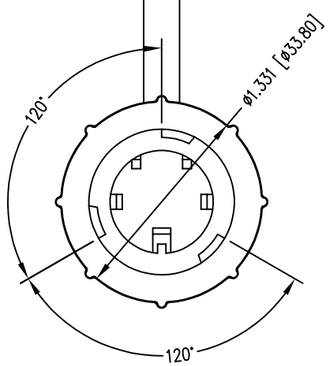

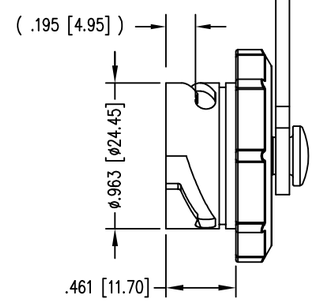

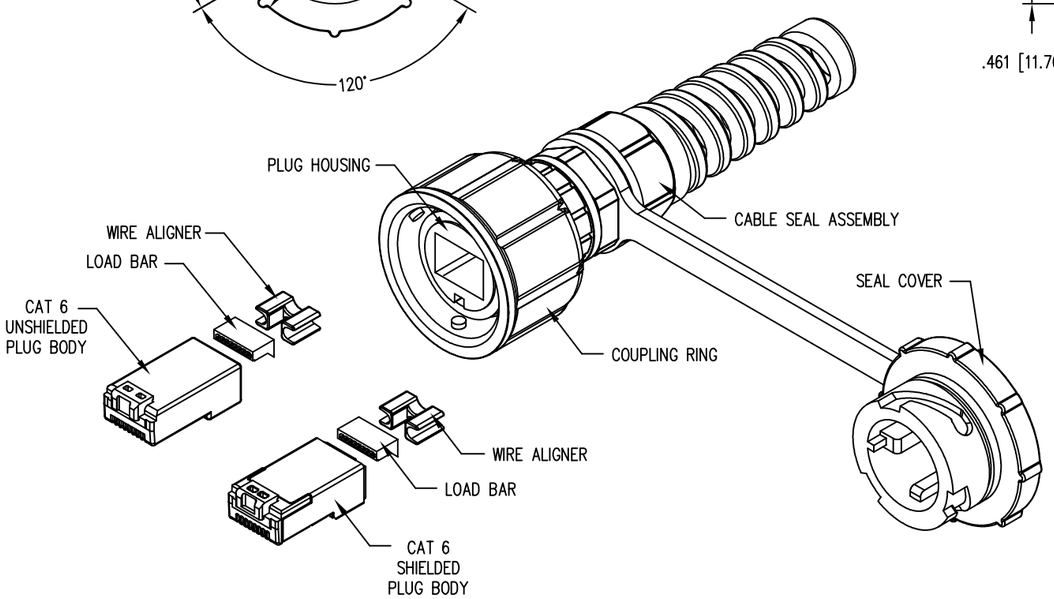

NOTES:

1. MATERIALS:
   PLUG BODY: POLYCARBONATE UL94 V-0, COLOR: CLEAR
   PLUG HOUSING: HIGH IMPACT PLASTIC UL94 V-0, COLOR: BLACK
   WIRE ALIGNER: POLYCARBONATE UL94 V-0, COLOR: CLEAR
   LOAD BAR: POLYCARBONATE UL94 V-0, COLOR: BLACK
   CONTACTS: COPPER ALLOY
   CONTACT PLATING: SELECTIVE GOLD OR EQUIVALENT
   IN THE CONTACT AREA
   SEE CHART FOR PART NUMBER
   SHIELD: COPPER ALLOY, NICKEL PLATE
2. CONTACTS TERMINATE SOLID OR STRANDED CONDUCTORS BETWEEN .037 [0.94] TO .042 [1.07] OUTSIDE DIAMETER OF INSULATION.
3. PLUG DIMENSIONS AND TOLERANCES COMPLY WITH TIA-1096 STANDARD.
4. DESIGNED FOR CATEGORY 6 APPLICATIONS.
5. INTERNATIONAL PROTECTION CODE MEETS IP67.
6. FOR ø0.177 [4.5] MIN. – ø0.307 [7.8] MAX. CABLE

SHIELDED	50 MICRO-INCHES [1.27um]	SS-39400-005
UNSHIELDED	50 MICRO-INCHES [1.27um]	SS-39400-004
PLUG TYPE	CONTACT PLATING IN MATING AREA	PART NUMBER

RoHS

THIRD ANGLE PROJECTION

DO NOT SCALE DRAWING

DRAWING IS SUBJECT TO CHANGE WITHOUT NOTICE

DIMENSIONS: INCHES [METRIC]

UNLESS OTHERWISE SPECIFIED TOLERANCES ARE ±.005 [0.13] ANGLES ARE ± 1°

SHEET NO. 1 OF 1

stewart CONNECTOR a bel group
11118 Susquehanna Trail South
Glen Rock, PA 17327-9199
(717) 235-7512
http://www.stewartconnector.com

TITLE: INDUSTRIAL PLUG IP67 (UTP/FTP) CAT 6 WITH PLASTIC HOUSING AND SHIELDED PLASTIC HOUSING

THIS DRAWING AND THE SUBJECT MATTER SHOWN THEREON ARE CONFIDENTIAL AND THE PROPRIETARY PROPERTY OF STEWART CONNECTOR AND SHALL NOT BE REPRODUCED, COPIED, OR USED IN ANY MANNER WITHOUT PRIOR WRITTEN CONSENT OF STEWART CONNECTOR. ONE OR MORE U.S. PATENTS MAY APPLY TO THIS PRODUCT. FOR DETAILS, PLEASE VISIT: HTTP://BELFUSE.COM/STEWART/STEWART_PATENTS/

DRN BY:	TRM	DATE	10-17-16
APPD BY:	DHG	DATE	10-27-16
DWG NO.	CT390168	REV.	A2

AutoCAD

Please read our datasheet & drawing disclaimer here.