DATE	REV	ECN	APP'D. BY
10-27-16	A0	-	-

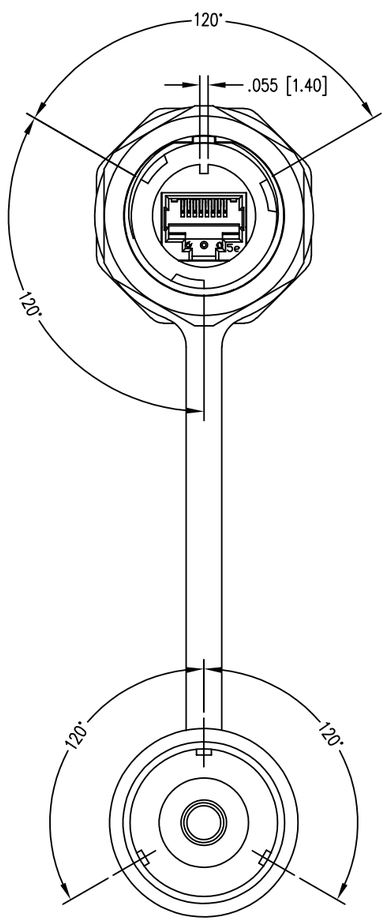

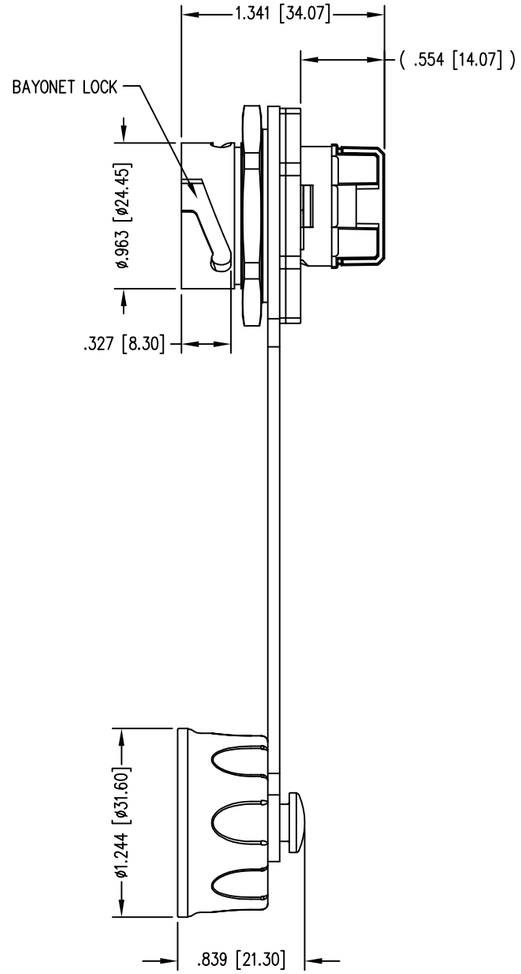

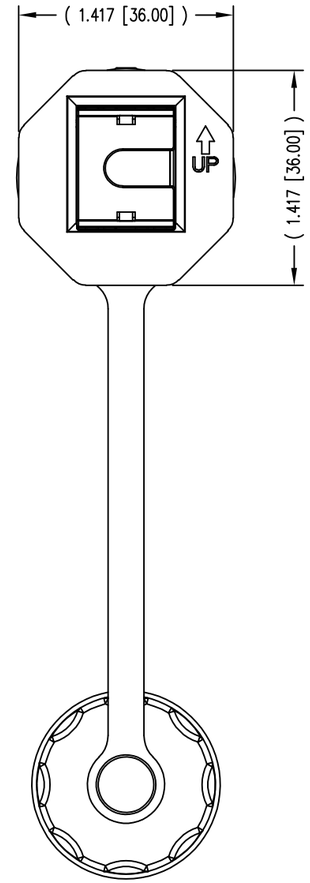

NOTES:

1. CONNECTOR MATERIALS:
   HOUSING: THERMOPLASTIC UL94 V-0
   JACK: THERMOPLASTIC UL94 V-0
   CONTACTS/IDC TERMINAL: COPPER ALLOY, TIN PLATED
   CONTACT PLATING: SELECTIVE GOLD OR EQUIVALENT IN THE CONTACT AREA SEE CHART FOR PART NUMBER
2. IDC WIRE GAUGE: 22~24 AWG
3. JACK DIMENSIONS AND TOLERANCES COMPLY WITH TIA-1096 STANDARD.
4. DESIGNED FOR CATEGORY 6 APPLICATIONS.
5. INTERNATIONAL PROTECTION CODE MEETS IP67.

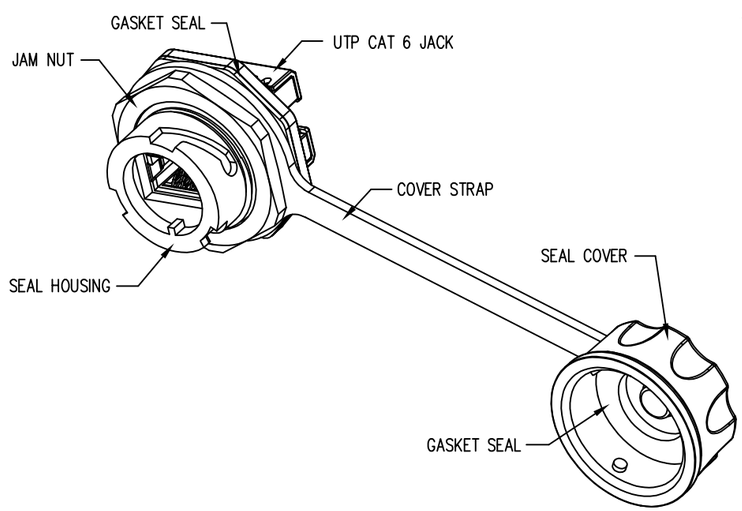

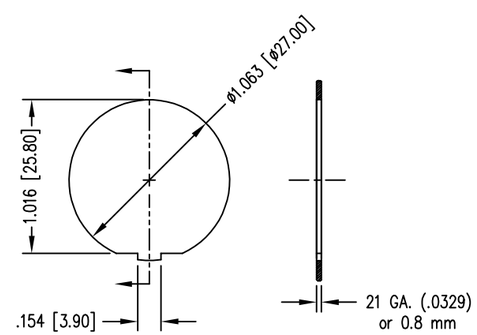

SUGGESTED PANEL OPENING

50 MICRO-INCHES [1.27um]	SS-60400-016
CONTACT PLATING IN MATING AREA	PART NUMBER

THIRD ANGLE PROJECTION

DO NOT SCALE DRAWING

DRAWING IS SUBJECT TO CHANGE WITHOUT NOTICE

DIMENSIONS: INCHES [METRIC]

UNLESS OTHERWISE SPECIFIED TOLERANCES ARE ±.005 [0.13] ANGLES ARE ± 1°

SHEET NO. 1 OF 1

RoHS

stewart CONNECTOR a bel group

11118 Susquehanna Trail South
Glen Rock, PA 17327-9199
(717) 235-7512
http://www.stewartconnector.com

TITLE: INDUSTRIAL JACK IP67 (UTP) CAT 6 WITH PLASTIC HOUSING

THIS DRAWING AND THE SUBJECT MATTER SHOWN THEREON ARE CONFIDENTIAL AND THE PROPRIETARY PROPERTY OF STEWART CONNECTOR AND SHALL NOT BE REPRODUCED, COPIED, OR USED IN ANY MANNER WITHOUT PRIOR WRITTEN CONSENT OF STEWART CONNECTOR. ONE OR MORE U.S. PATENTS MAY APPLY TO THIS PRODUCT. FOR DETAILS, PLEASE VISIT: HTTP://BELFUSE.COM/STEWART/STEWART_PATENTS/

DRN BY:	TRM	DATE	10-17-16
APPD BY:	DHG	DATE	10-27-16
DWG NO.	CT600168	REV.	A0

AutoCAD