DATE	REV	ECN	APP'D. BY
1-16-15	A1	10206	TRM
3-16-16	A2	10627	TRM

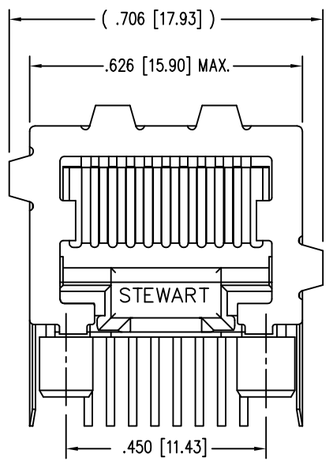

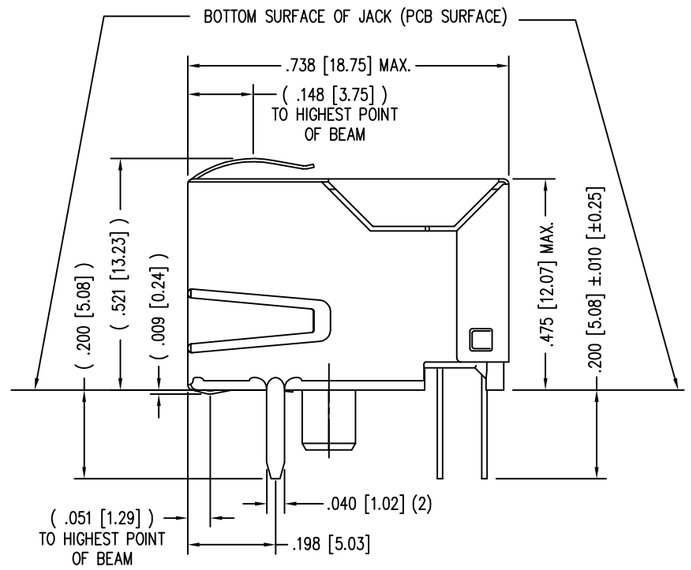

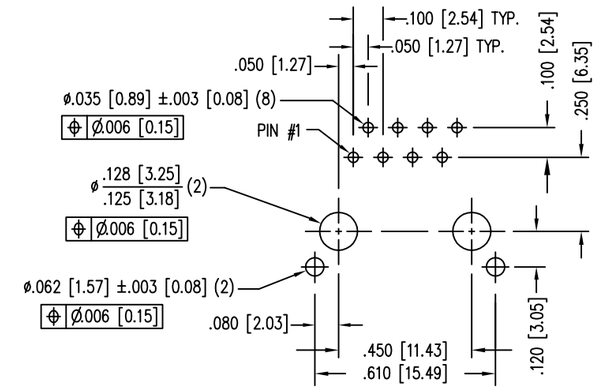

P.C.B. RECOMMENDED HOLE LAYOUT
SEEN FROM COMPONENT SIDE

ALL CENTERLINE DIMENSIONS ARE BASIC.

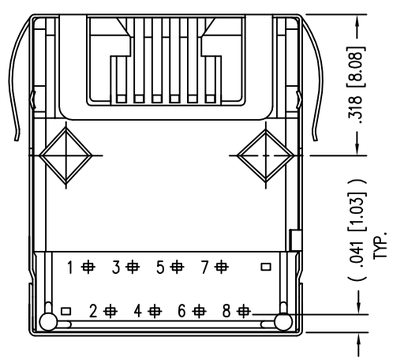

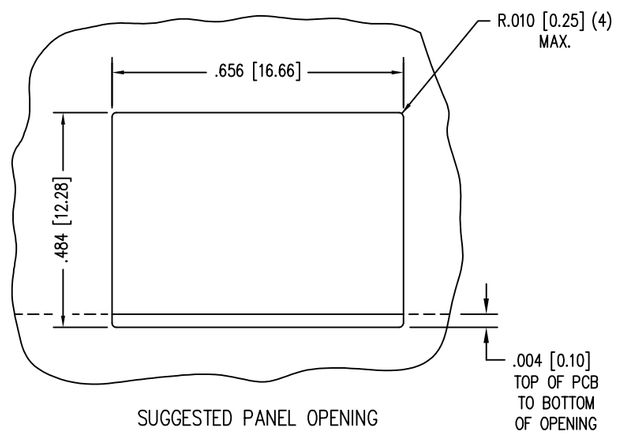

SUGGESTED PANEL OPENING

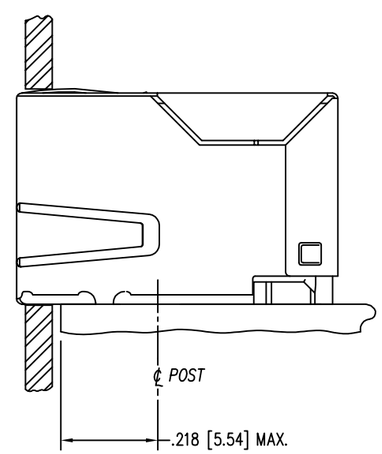

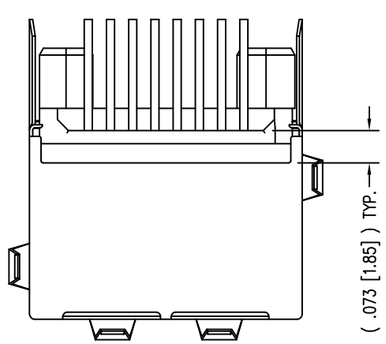

NOTES:

1. CONNECTOR MATERIALS:
   HOUSING: HI-TEMP, UL94 V-0
   CONTACTS/SHIELD: COPPER ALLOY
   SHIELD PLATING: NICKEL
   CONTACT PLATING: SELECTIVE GOLD IN CONTACT AREA
   SEE CHART FOR PART NUMBER
2. FOR PRODUCT SPECIFICATIONS SEE PR022-01.
3. RATED AT MAX. 260°C FOR MAX. 10 SECS.
4. DIMENSIONS AND TOLERANCES COMPLY WITH TIA-1096 STANDARD.
5. THE SUGGESTED PANEL OPENING IS INTENDED TO GIVE USER THE ABILITY TO HAVE REASONABLE JACK/PANEL CLEARANCES, YET MAINTAIN GROUNDING CAPABILITY. THESE VARIABLES CAN BE ADJUSTED IN EITHER DIRECTION BUT MAY CARRY SOME CONSEQUENCES IN THE FORM OF LOWER MATING FORCES OR TIGHTER ASSEMBLY TOLERANCES.

50 MICRO-INCHES [1.27um]	SS70100-052F
CONTACT PLATING IN MATING AREA	PART NUMBER

RoHS

THIRD ANGLE PROJECTION

stewart CONNECTOR a bel group
11118 Susquehanna Trail South
Glen Rock, PA 17327-9199
(717) 235-7512
http://www.stewartconnector.com

DO NOT SCALE DRAWING

DRAWING IS SUBJECT TO CHANGE WITHOUT NOTICE

DIMENSIONS: INCHES [METRIC]

UNLESS OTHERWISE SPECIFIED TOLERANCES ARE ±.005 [0.13] ANGLES ARE ± 1°

SHEET NO. 1 OF 1

TITLE: EIGHT CONTACT, TEN POSITION, SHIELDED MICRO JACK WITH DOUBLE THICKNESS OF POLYIMIDE FILM UNDER SHIELD

THIS DRAWING AND THE SUBJECT MATTER SHOWN THEREON ARE CONFIDENTIAL AND THE PROPRIETARY PROPERTY OF STEWART CONNECTOR AND SHALL NOT BE REPRODUCED, COPIED, OR USED IN ANY MANNER WITHOUT PRIOR WRITTEN CONSENT OF STEWART CONNECTOR. ONE OR MORE U.S. PATENTS MAY APPLY TO THIS PRODUCT. FOR DETAILS, PLEASE VISIT: HTTP://BELFUSE.COM/STEWART/STEWART_PATENTS/

DRN BY:	TRM	DATE	5-21-14
APPD BY:	DHG	DATE	5-21-14
DWG NO.	CT700065F	REV.	A2

AutoCAD