DATA CONTAINED IN THIS DOCUMENT IS PROPRIETARY TO TROMPETER ELECTRONICS INC. AND SHALL NOT BE DISCLOSED, COPIED OR USED FOR PROCUREMENT OR MANUFACTURE WITHOUT EXPRESS WRITTEN PERMISSION OF TROMPETER ELECTRONICS INC.

REVISIONS		12-20	SH 1
REV	DESCRIPTION	DATE	APPROVED
R	REVISED PER ECO 14973	3/11/03	WSZ

P2 CONN TYPE	FIG NO	P1 CONN TYPE: BJ20						UBJ20						BJ40						UBJ40						BJ120					
		SCHEMATICS																													
		E1	E2	E3	E4	E5	E7	E1	E2	E3	E4	E5	E7	E1	E2	E3	E4	E5	E7	E1	E2	E3	E4	E5	E7	E1	E2	E3	E4	E5	E7
		DASH NUMBERS																													
PL73	1A/B	-1	-2	-3	-4	-5	-121	-6	-7	-8	-9	-10	-127	-11	-12	-13	-14	-15	-133	-16	-17	-18	-19	-20	-139						
PL74	2A	-21	-22	-23	-24	-25	-122	-26	-27	-28	-29	-30	-128	-31	-32	-33	-34	-35	-134	-36	-37	-38	-39	-40	-140						
6 PL75	4	-41	-42	-43	-44	-45	-123	-46	-47	-48	-49	-50	-129	-51	-52	-53	-54	-55	-135	-56	-57	-58	-59	-60	-141	-225	-226	-227	-228	-229	-230
PL75FL	2A	-61	-62	-63	-64	-65	-124	-66	-67	-68	-69	-70	-130	-71	-72	-73	-74	-75	-136	-76	-77	-78	-79	-80	-142						
PL375	2B	-81	-82	-83	-84	-85	-125	-86	-87	-88	-89	-90	-131	-91	-92	-93	-94	-95	-137	-96	-97	-98	-99	-100	-143						
PL71	3	-101	-102	-103	-104	-105	-126	-106	-107	-108	-109	-110	-132	-111	-112	-113	-114	-115	-138	-116	-117	-118	-119	-120	-144						
PL74RG	2A	-221		-193				-222		-194				-223		-195				-224		-196									
6 PL75RG	4	-197	-198	-199	-200	-201	-202	-203	-204	-205	-206	-207	-208	-209	-210	-211	-212	-213	-214	-215	-216	-217	-218	-219	-220						

TABLE 1 6
POLARIZATION CHART

KEY LETTER	A°	B°	C°	COLOR BAND
NONE	120°	120°	120°	NONE
S	135°	135°	90°	WHITE
T	100°	150°	110°	RED
U	120°	130°	110°	ORANGE
V	115°	130°	115°	YELLOW
W	125°	110°	125°	GREEN
X	130°	100°	130°	BLUE
Y	110°	140°	110°	VIOLET
Z	100°	160°	100°	GRAY

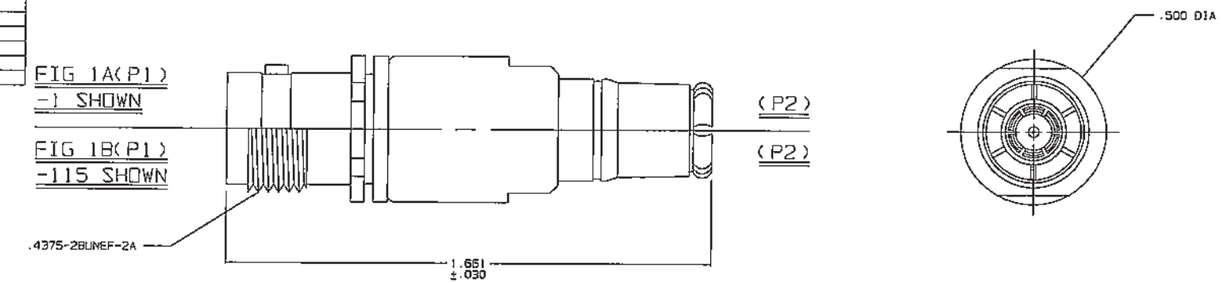

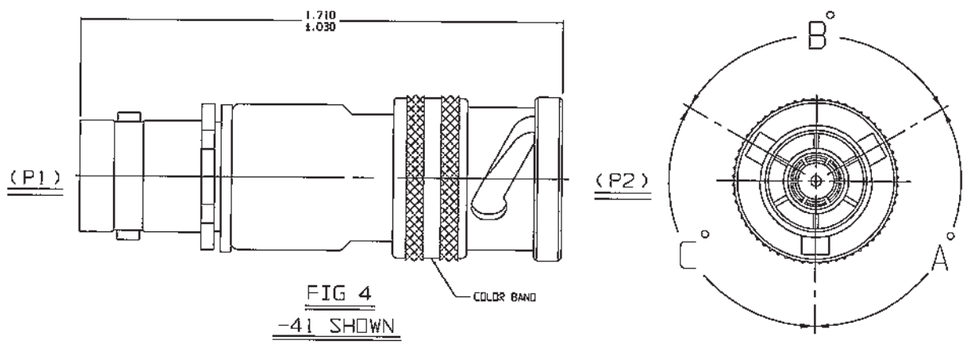

FIG 4
-41 SHOWN

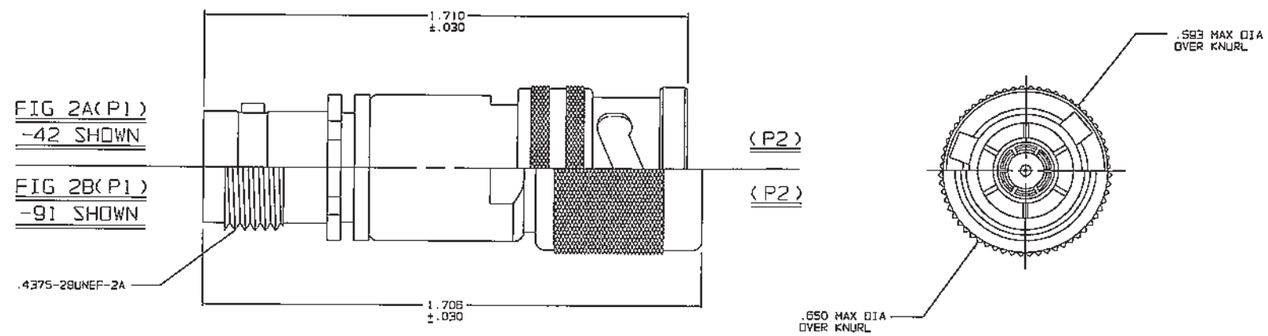

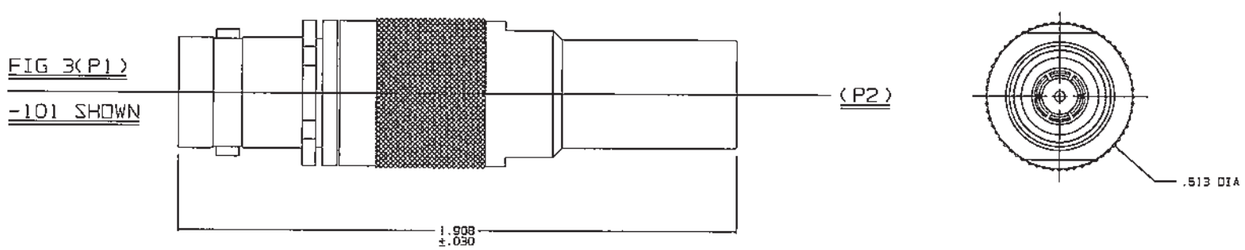

6 SEE TABLE 1 FOR POLARIZATION LETTER CODE

5. EXAMPLE OF COMPLETE MODEL NO:
AD - U BJ20 - E1 - PL75 RG X
ADAPTER
U=75 OHMS
(P1) CONN TYPE
SCHEMATIC
(P2) CONN TYPE
REVERSE GENDER; OMIT FOR NORMAL GENDER
POLARIZATION LETTER CODE; OMIT FOR NONE 6

4. EXAMPLE OF COMPLETE PART NO:
12-20-1X
BASIC PART NO
DASH NO
POLARIZATION LETTER CODE; OMIT FOR NORMAL GENDER 6

3. BETWEEN SERIES ADAPTER, 50 & 75 OHM BNC / TNC SERIES JACK TO "70" SERIES PLUG

2. FINISH: TFS-1A (NICKEL)

1. ALL DIM ARE IN INCHES

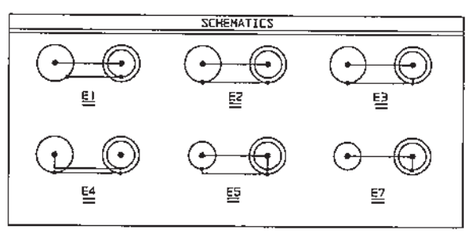

RED INDICATES ORIGINAL

INTERPRET DRAWING PER MIL-STD-100
DIMENSIONS ARE IN INCHES AND INCLUDE FINISH THICKNESS UNLESS OTHERWISE SPECIFIED

DRAWN	AAH	DATE 3-10-03
CHECKED	DD	3-10-03
QUALITY		3/11/03
MANUF		3/11/03
APPROVED		3/16/03
CAD FILE NO.	12-20R	

TOL: UNLESS SPECIFIED .XX .XXX ± .005 .XXXX ANGLES
MATERIAL:
FINISH:
DO NOT SCALE DWG
NEXT ASSY

TROMPETER RF connectivity
a cinch connectivity solutions brand

TITLE: ADAPTER; FEMALE BNC/ TNC SERIES TO MALE "70" SERIES

SIZE	CAGE CODE	DRAWING NO.	REV.
A	14949	12-20	R

SCALE 2/1 | DATE: 12/15/86 | SHEET 1C

Please read our datasheet & drawing disclaimer here.