PART NUMBER	ITEM ①					ITEM ②	ITEM ③	ITEM ④	ITEM ⑤
	BODY	SOCKET	INSULATOR 1	INSULATOR 2	PROTECTION CAP	LOCKING BLOCK	SCREW	LOCKING WASHER	GASKET
142–0791–301	BRASS GOLD PLATING	BERYLLIUM COPPER GOLD PLATING	PTFE	PTFE	SOFT PVC	BRASS GOLD PLATING	STAINLESS STEEL PASSIVATED	STAINLESS STEEL PASSIVATED	SILICON

REV	ECO	DATE
1	INITIAL RELEASE	01/30/2023
2	ENGINEERING CHANGE	01/02/2024

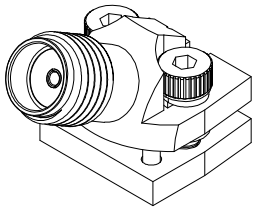

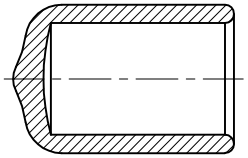

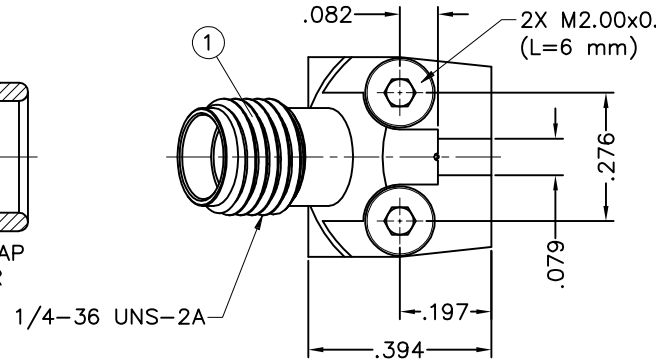

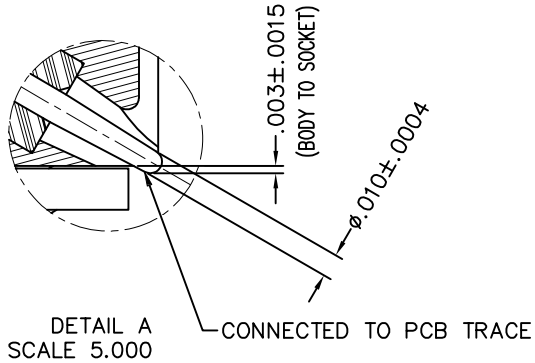

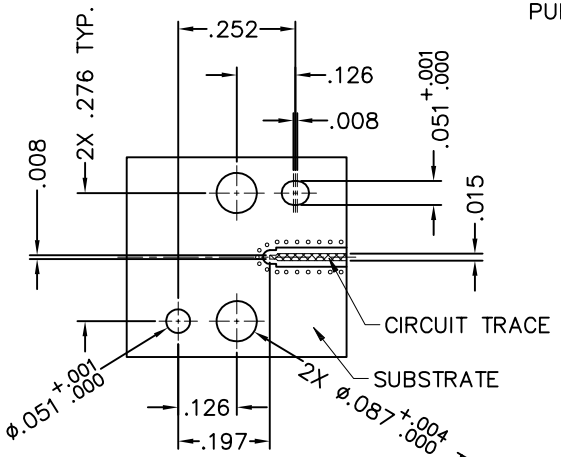

RECOMMENDED PCB LAYOUT

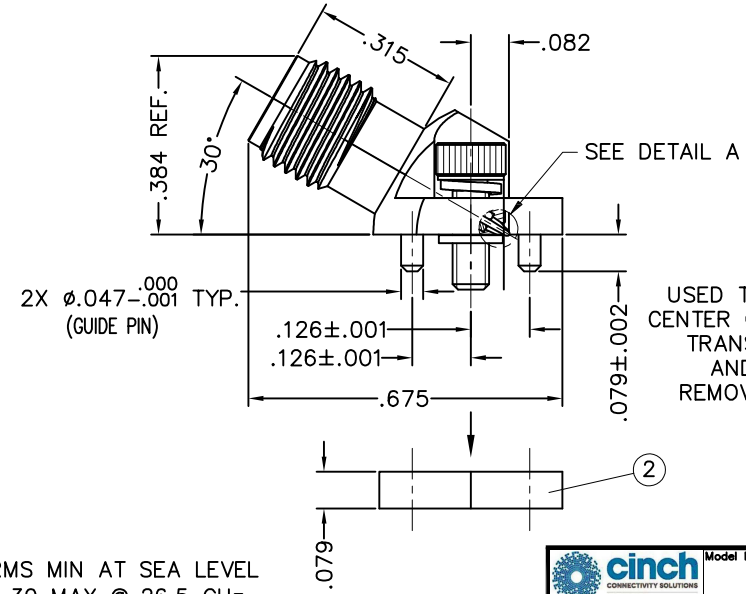

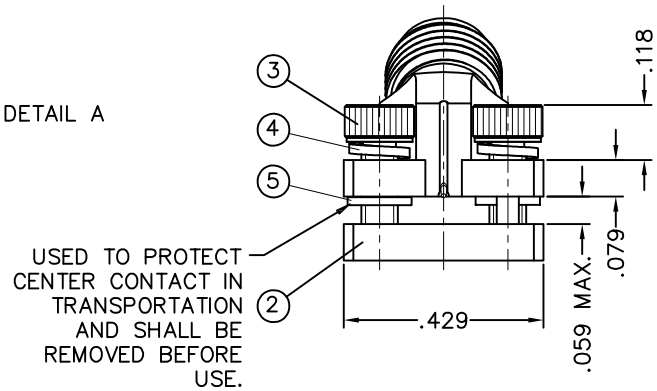

SPECIFICATION:
- IMPEDANCE: 50 OHMS
- FREQUENCY RANGE: DC–26.5 GHz
- INSULATION RESISTANCE: 5000 MOHM MIN
- CONTACT RESISTANCE:
  - CENTER CONTACT: 1.5 MILLIOHM MAX
  - OUTER CONTACT: 0.8 MILLIOHM MAX
- DIELECTRIC WITHSTANDING VOLTAGE: 500 VRMS MIN AT SEA LEVEL
- VOLTAGE STANDING WAVE RATION (VSWR): 1.30 MAX @ 26.5 GHz
- WORKING VOLTAGE: 400 VRMS MAX AT SEA LEVEL
- INERTION LOSS: 0.62 dB MAX @ 26.5 GHz
- DURABILITY: 500 CYCLES MIN
- TEMPERATURE RANGE: –65 TO +165 DEG C

cinch CONNECTIVITY SOLUTIONS a bel group

This PROPRIETARY Document is property of Cinch Connectivity Solutions.It is confidential in nature, non-transferable, and issued with the clear understanding that it is not traced or copied without permission and is returnable upon demand.

INTERPRET DRAWING IN ACCORDANCE WITH ASME Y14.5–2018.

Model No: 142–0791–301/310

RoHS ☑ (EU)/2015/863 COMPLIANT

Cage Code

3RD ANGLE PROJECTION

UNLESS OTHERWISE SPECIFIED UNITS: INCH

.XX ±–
.XXX ±.004
ANGLES±2°

Drawn by: TOMMY REN

Date: 01/30/2023

JOHNSON

Title: SMA JACK, SOLDERLESS PCB MOUNT, 30 DEGREE

Drawing No. 142–0791–301/310 REV. 2

Size B | DO NOT SCALE DRAWING | Workmanship Std: NONE | Sheet 1 OF 1