# RED INDICATES ORIGINAL

DATA CONTAINED IN THIS DOCUMENT IS PROPRIETARY TO TROMPETER ELECTRONICS INC. AND SHALL NOT BE DISCLOSED, COPIED OR USED FOR PROCUREMENT OR MANUFACTURE WITHOUT EXPRESS WRITTEN PERMISSION.

| REVISIONS | | | 3-0018 | | SH 1 |
|---|---|---|---|---|---|
| REV | ECO | DESCRIPTION | DWN | APPROVED | DATE |
| AJ | 11465 | FOR CHANGES SEE ECO | AAH | BM / FQ | 1/19/96 |

| TABLE 1 | | |
|---|---|---|
| DASH NO | CABLES ACCOMMODATED | ASSEMBLE PER |
| -7 | TRC-50-2/TRC-75-2 | TAI-189 |
| -9 | TWC-78-2/TWC-124-2 | TAI-102 |
| -23 | 250-3884, MICRODOT | TAI-189 |
| -24 | 202-3934, MICRODOT | TAI-102 |
| -24A | 9530A5117, RAYCHEM | TAI-189 |
| -25 | T-434, GENERAL | TAI-102 |
| -25A | 5021H5391, RAYCHEM | TAI-189 |
| -26 | 7028A5518, RAYCHEM | |
| -27 | 202-3927, MICRODOT | TAI-102 |
| -29 | TWC-78-1/TWC-124-1A | |
| -30 | 761A, W.E.CO./8441, BELDEN | |
| -32 | TRC-50-1 | TAI-189 |
| -33 | TRC-75-1 | |
| -42 | 21-204, ESSEX 4463, CONSOLIDATED | |
| -43 | 250-4044/250-4045 283-3930, MICRODOT | |
| -45 | M27500-22TE2T14 1100-66F, STANDARD | TAI-102 |
| -47 | M17/176-00002 | |
| -49 | TWAC-78-1F2 | |
| -55 | 89272, BELDEN | |
| -56 | GC875GC1, GRUMMAN | TAI-189 |
| -57 | GC875G81, GRUMMAN | |
| -58 | GC875TM24H, GRUMMAN | TAI-102 |
| -59 | GC875LN1, GRUMMAN | |
| -60 | M17/177, THERMATICS 380-10045, BOEING | TAI-189 |
| -64 | 7528A5314, RAYCHEM | |

| TABLE 3 POLARIZATION CHART | | | | |
|---|---|---|---|---|
| KEYING LETTER | A DEGREES | B DEGREES | C DEGREES | COLOR BAND |
| NONE | 120° | 120° | 120° | NONE |
| T | 100° | 150° | 110° | RED |
| U | 120° | 130° | 110° | ORANGE |
| V | 115° | 130° | 115° | YELLOW |
| W | 125° | 110° | 125° | GREEN |
| X | 130° | 100° | 130° | BLUE |
| Y | 110° | 140° | 110° | VIOLET |
| Z | 100° | 160° | 100° | GRAY |
| S | 135° | 135° | 90° | WHITE |

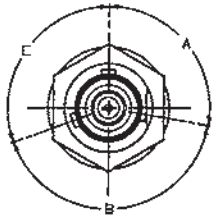


-7 SHOWN

FIG 1

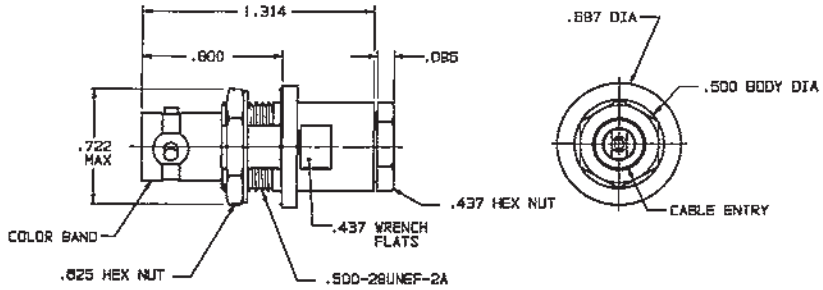


| INCH | MM |
|---|---|
| .005 | 0.13 |
| .096 | 2.44 |
| .125 | 3.18 |
| .132 | 3.35 |
| .145 | 3.68 |
| .160 | 4.06 |
| .164 | 4.17 |
| .183 | 4.65 |
| .191 | 4.85 |
| .198 | 5.03 |
| .200 | 5.08 |
| .217 | 5.51 |
| .218 | 5.54 |
| .221 | 5.61 |
| .235 | 5.97 |
| .250 | 6.35 |
| .274 | 6.96 |
| .285 | 7.24 |
| .300 | 7.62 |
| .437 | 11.10 |
| .500 | 12.70 |
| .505 | 12.83 |
| .510 | 12.95 |
| .625 | 15.88 |
| .687 | 17.45 |
| .722 | 18.34 |
| .800 | 20.32 |
| 1.314 | 33.38 |
| 1.846 | 46.88 |

| TABLE 2 ⚠6 | | |
|---|---|---|
| MILITARY PART NO (PIN) | MILITARY CABLE PART NO | TROMPETER PART NO (REF ONLY) ⚠6 |
| M49142/05-0001 | M17/134-00001 | M3-0018-7 |
| M49142/05-0101 | M17/134-00001 | M3-0018Y-7 |
| M49142/05-0201 | M17/134-00001 | M3-0018S-7 |
| M49142/05-0002 | M17/134-00002 | M3-0018-7 |
| M49142/05-0102 | M17/134-00002 | M3-0018Y-7 |
| M49142/05-0202 | M17/134-00002 | M3-0018S-7 |
| M49142/05-0007 | M17/45-RG108 | M3-0018-9 |
| M49142/05-0107 | M17/45-RG108 | M3-0018Y-9 |
| M49142/05-0207 | M17/45-RG108 | M3-0018S-9 |
| M49142/05-0008 | M17/176-00002 | M3-0018-47 |
| M49142/05-0108 | M17/176-00002 | M3-0018Y-47 |
| M49142/05-0208 | M17/176-00002 | M3-0018S-47 |
| M49142/05-0009 | M17/177-00001 | M3-0018-60 |
| M49142/05-0109 | M17/177-00001 | M3-0018Y-60 |
| M49142/05-0209 | M17/177-00001 | M3-0018S-60 |

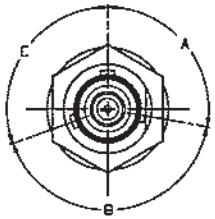


-7 SHOWN

FIG 2 ⚠5

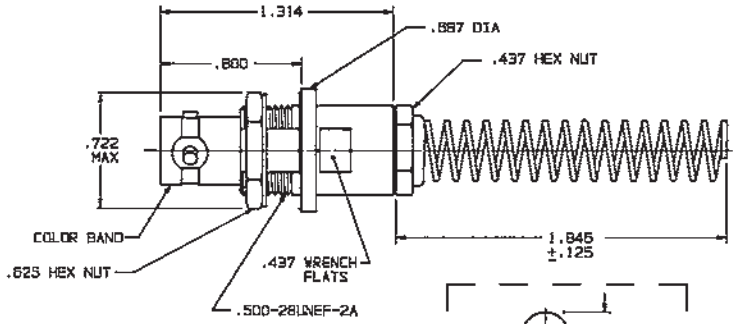


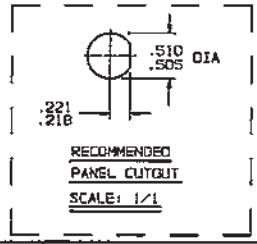


| CABLE ENTRY | | | |
|---|---|---|---|
| DASH NO | DIA | DASH NO | DIA |
| -7 | .274 | -33 | .217 |
| -9 | .285 | -42 | .300 |
| -23 | .183 | -43 | .200 |
| -24 | .191 | -45 | .183 |
| -24A | .200 | -47 | .164 |
| -25 | .285 | -49 | .132 |
| -25A | .285 | -55 | .250 |
| -26 | .183 | -56 | .191 |
| -27 | .145 | -57 | |
| -29 | .191 | -58 | .198 |
| -30 | .235 | -59 | |
| -32 | .181 | -60 | .217 |

⚠6 WHEN CONNECTOR IS SUPPLIED TO MILITARY PART NO (SEE TABLE 2):

a) ALL PARTS NORMALLY PLATED TFS-1A OR TFS-1U (NICKEL) ARE TO BE PLATED TFS-1M (SILVER)

b) MARK PART WITH MILITARY PIN (SEE TABLE 2) AND "14949"

c) QUALITY CONFORMANCE INSPECTION SHALL BE PER MIL-C-49142 SECTION 4.5

⚠5 IF BEND RELIEF SPRING REQD ADD SUFFIX "BR" TO MODEL NO (SEE FIG 2)

4. CONCENTRIC TWINAX/TRIAX TR8 BULKHEAD MOUNT CABLE RECEPTACLE
3. MAX PANEL THK .160
2. FINISH: TFS-1A (NICKEL) ⚠6
1. ALL DIM ARE IN INCHES

7. EXAMPLE OF COMPLETE MODEL NO:

8J79 T-7

BASIC MODEL NO — POLARIZATION LETTER (SEE TABLE 3) — DASH NO

| NEXT ASSY |
|---|
| 305-0522 |
| 305-0521 |
| 305-0458 |
| 305-0404 |
| 305-0382 |
| 205-0030 |
| 305-0575 |
| 305-0534 |
| 210-0003 |

| QTY | DESCRIPTION | PART NUMBER | ITEM |
|---|---|---|---|
| TOL UNLESS SPECIFIED .XX ± .XXX ± .005 .XXXX ± ANGLES ± | TROMPETER RF connectivity | 8J79/T/V/W/ X/Y/Z/S/BR | |

| | | | | | | |
|---|---|---|---|---|---|---|
| DWN | AAH | 1-13-96 | MATERIAL | CODE IDENT | DRAWING NO. | REV |
| CHK | BM | 1-18-96 | — | 14949 | 3-0018 | AJ |
| ENGR | — | — | | | | |
| APPR | FQ | 1/19/96 | SCALE 2/1 | DATE 4/13/87 | SHEET 1 OF 2 | |